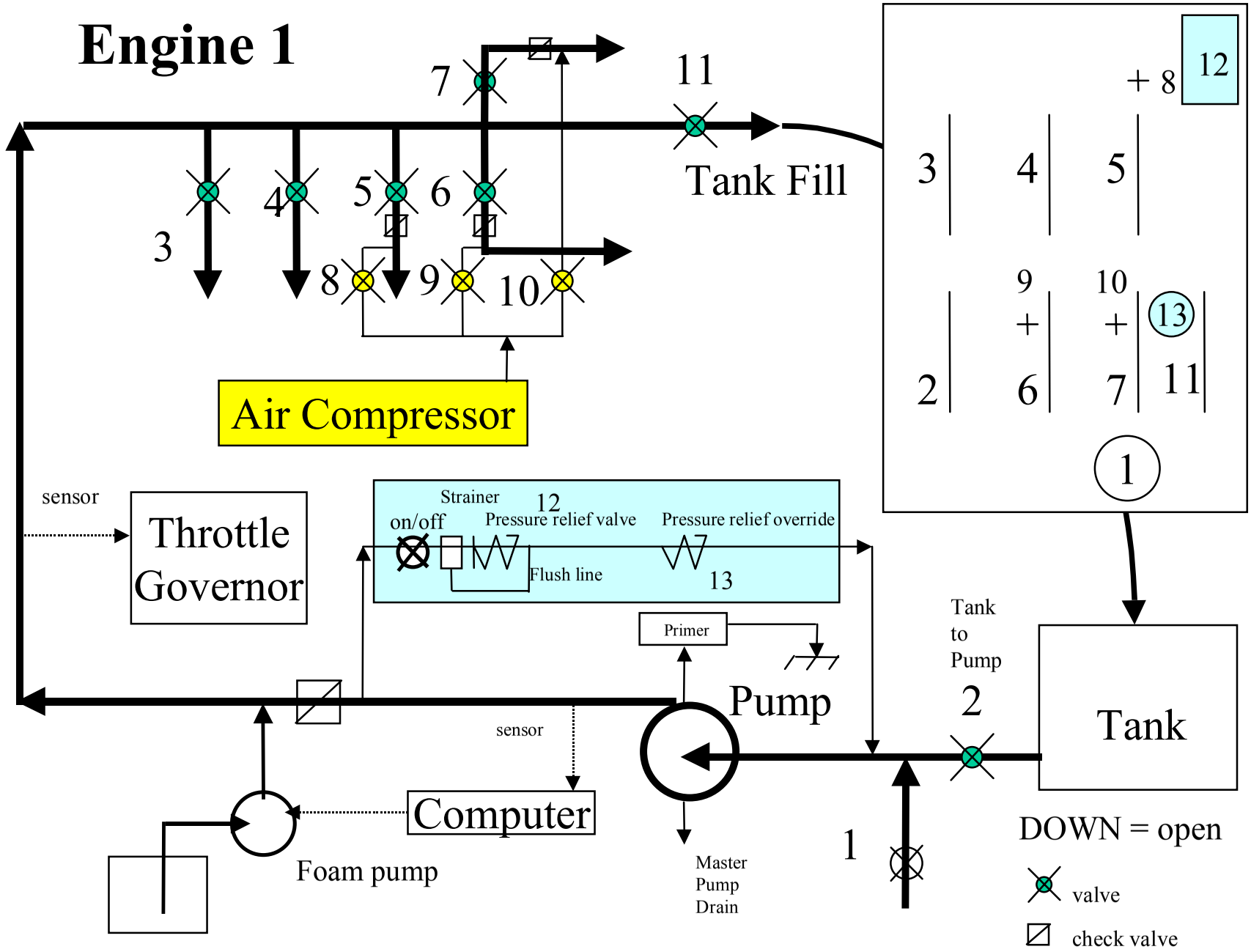
Engine 1
7
11
Tank Fill
3
4
5
6
8
9
10
Air Compressor
+ 8
12
3
4
5
9
+
10
+
13
2
6
7
11
1
sensor
Throttle Governor
Strainer
12
on/off
Pressure relief valve
Pressure relief override
Flush line
13
Primer
Tank to Pump
2
Pump
Tank
sensor
Computer
Foam pump
Master Pump Drain
1
DOWN = open
valve
check valve